Single hole lavatory faucet without drain

AS00

Specifications

Descriptions

- 3/8" speedway compression
- Ceramic cartridge
- No drain

Available colors

- C : Chrome
- BN : Brushed Nickel (PVD)
- PN : Polished Nickel (PVD)

Available flows

- 5.7 L/min, 1.5 gpm (US) 60psi *****
- 1.9 L/min, 0.5 gpm (US) 60psi (**AS00-05**)
- 3.7 L/min, 1 gpm (US) 60psi (**AS00-10**)

EPA certification applicable to the indicated model only

Certifications

- CSA B125.1
- NSF/ANSI standard 61 and 372
- ASME A112.18.1
- CMR248 Approval

* WaterSense Meets EPA Criteria Certified by IAPMO R&T

cUPC®

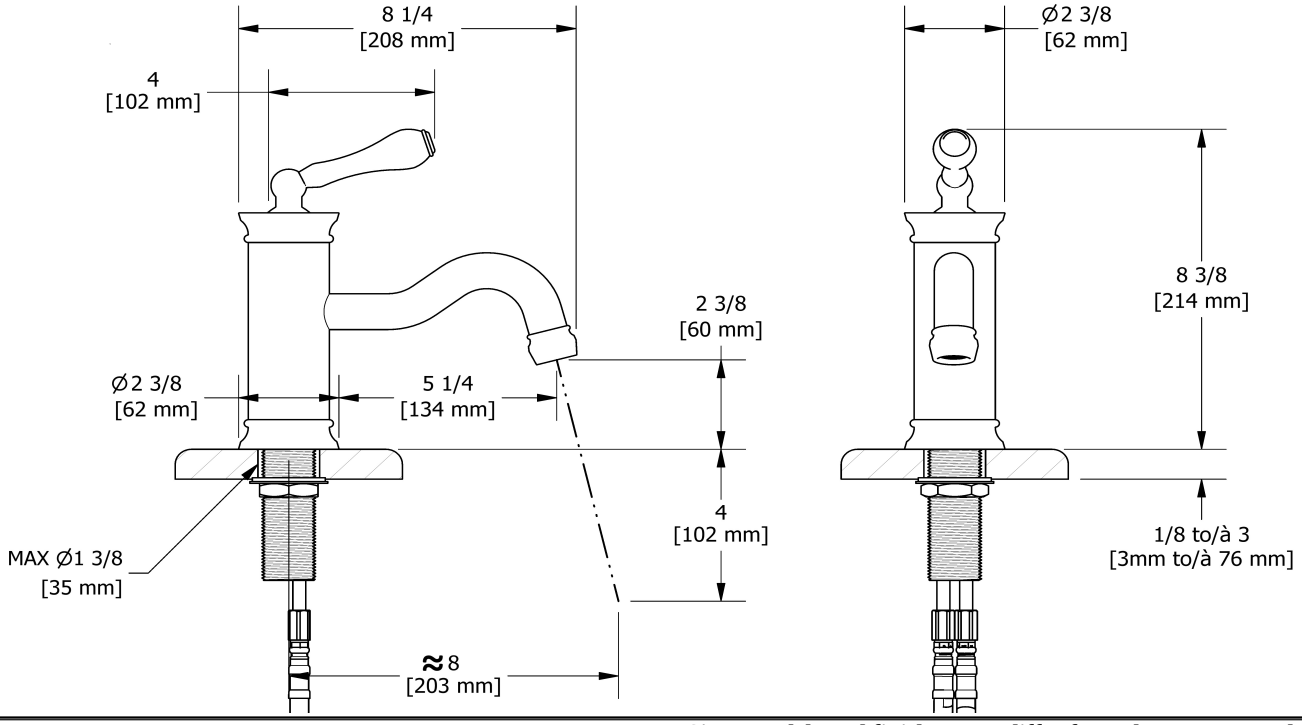

Sizes, models and finishes may differ from thoses presented.

Warranty

This **Riobel Inc.** product you have purchased carries a Limited Lifetime Warranty on the chrome, PVD finish, blacks and all working parts and is guaranteed from the initial purchase date against all manufacturing defects. All other finishes, including plastic components, are guaranteed for one year. All electric and/or electronic parts are covered by a 5-year limited warranty.

Customer Service

Ontario, West Canada : 888-287-5354 Quebec, Maritimes, United States : 866-473-8442

2020.06.10