BLU-V-24
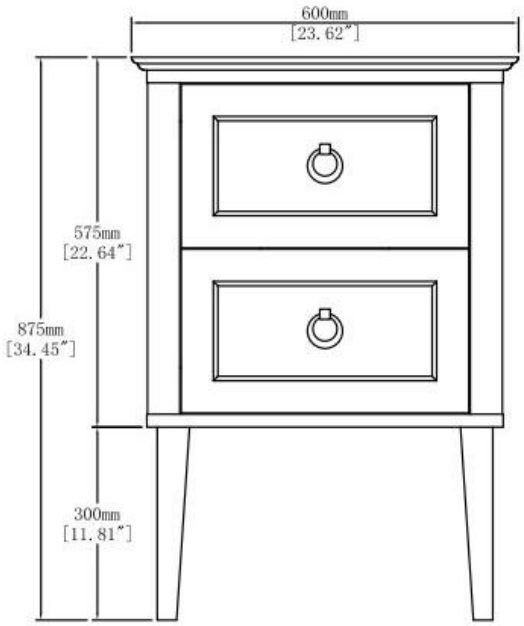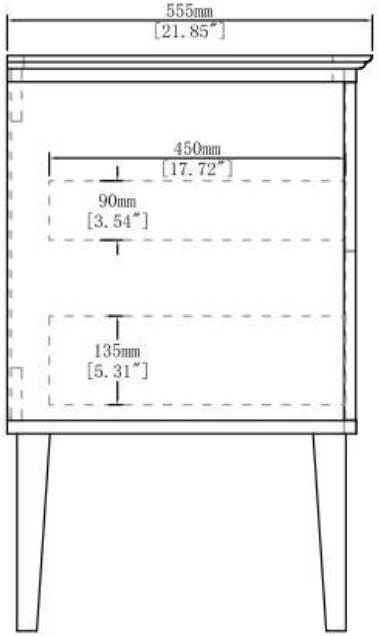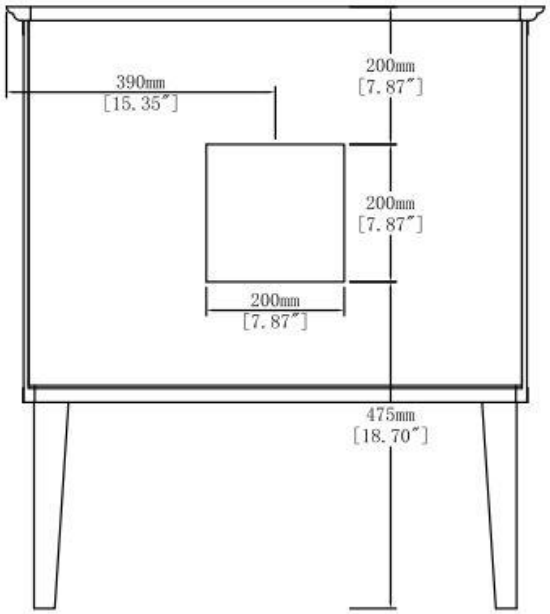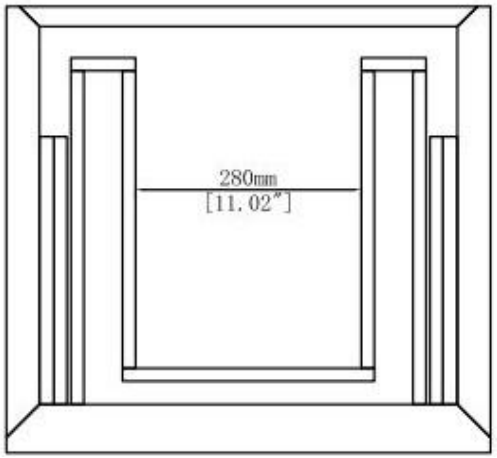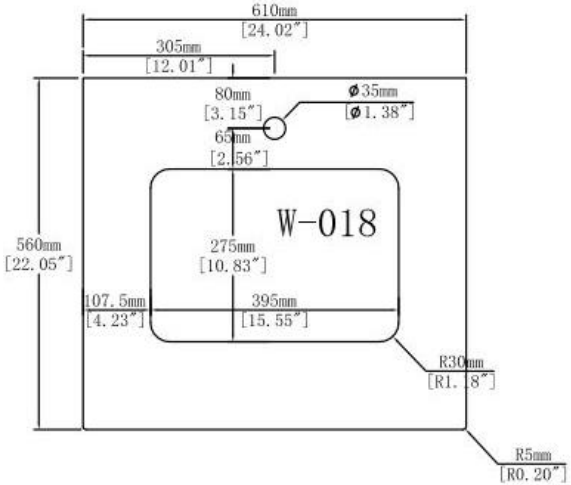
Bluestar Floor Mount 24” Single Sink Vanity