ASH2-W-49

Ashley Wall Mount 49” Double Sink Vanity

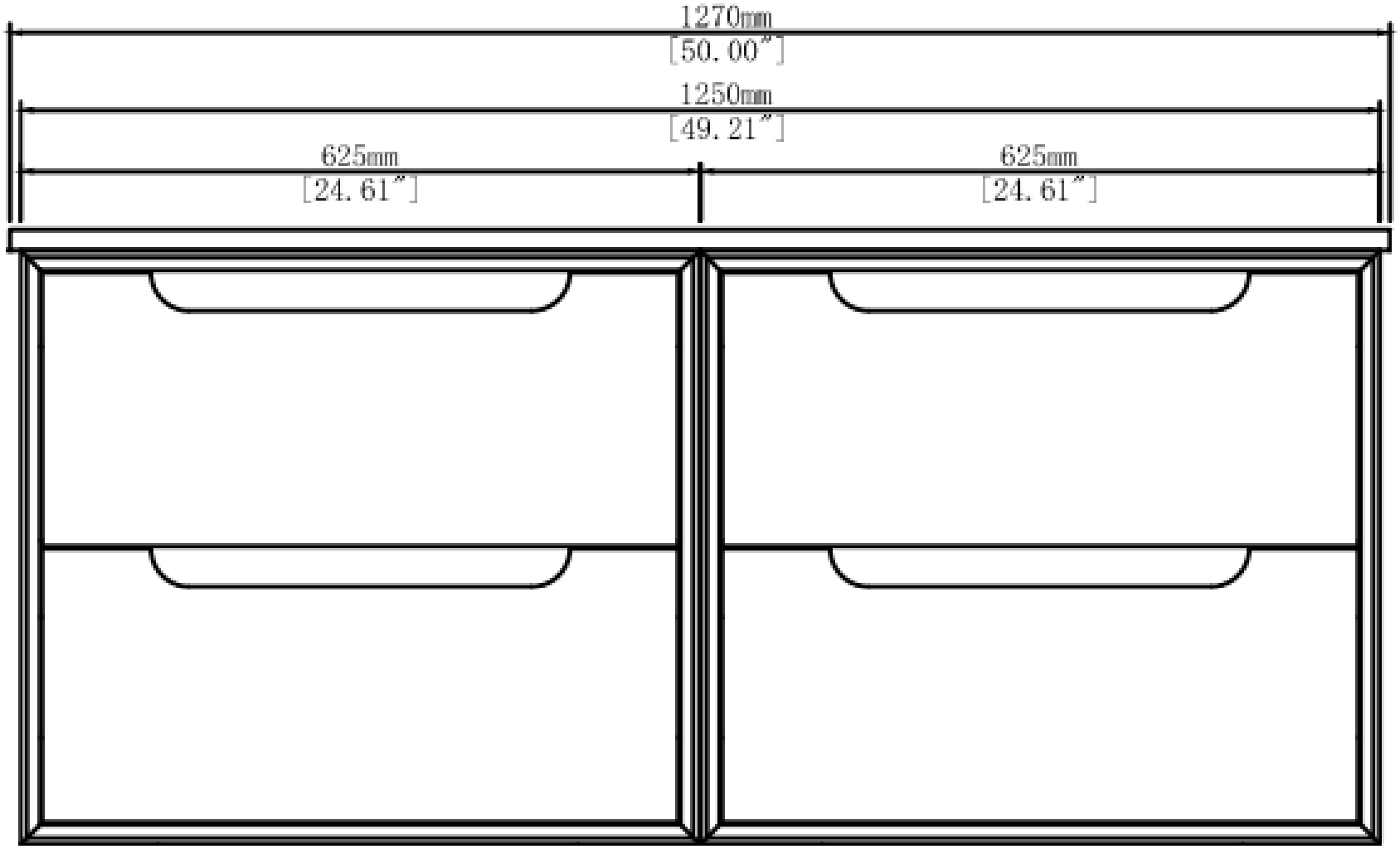

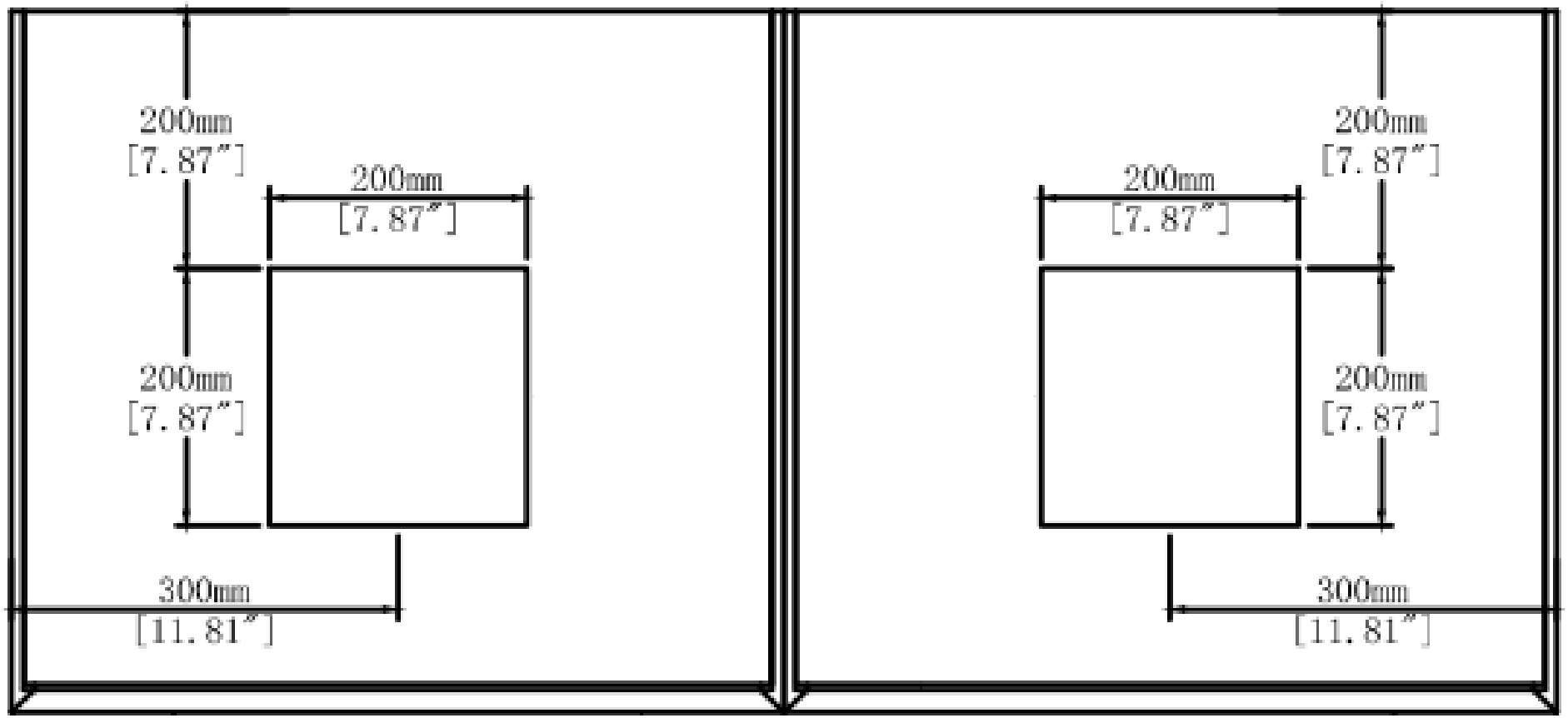
200mm
[7.87″]
200mm
[7.87″]
200mm
[7.87″]
300mm
[11.81″]
200mm
[7.87″]
200mm
[7.87″]
200mm
[7.87″]
300mm
[11.81″]

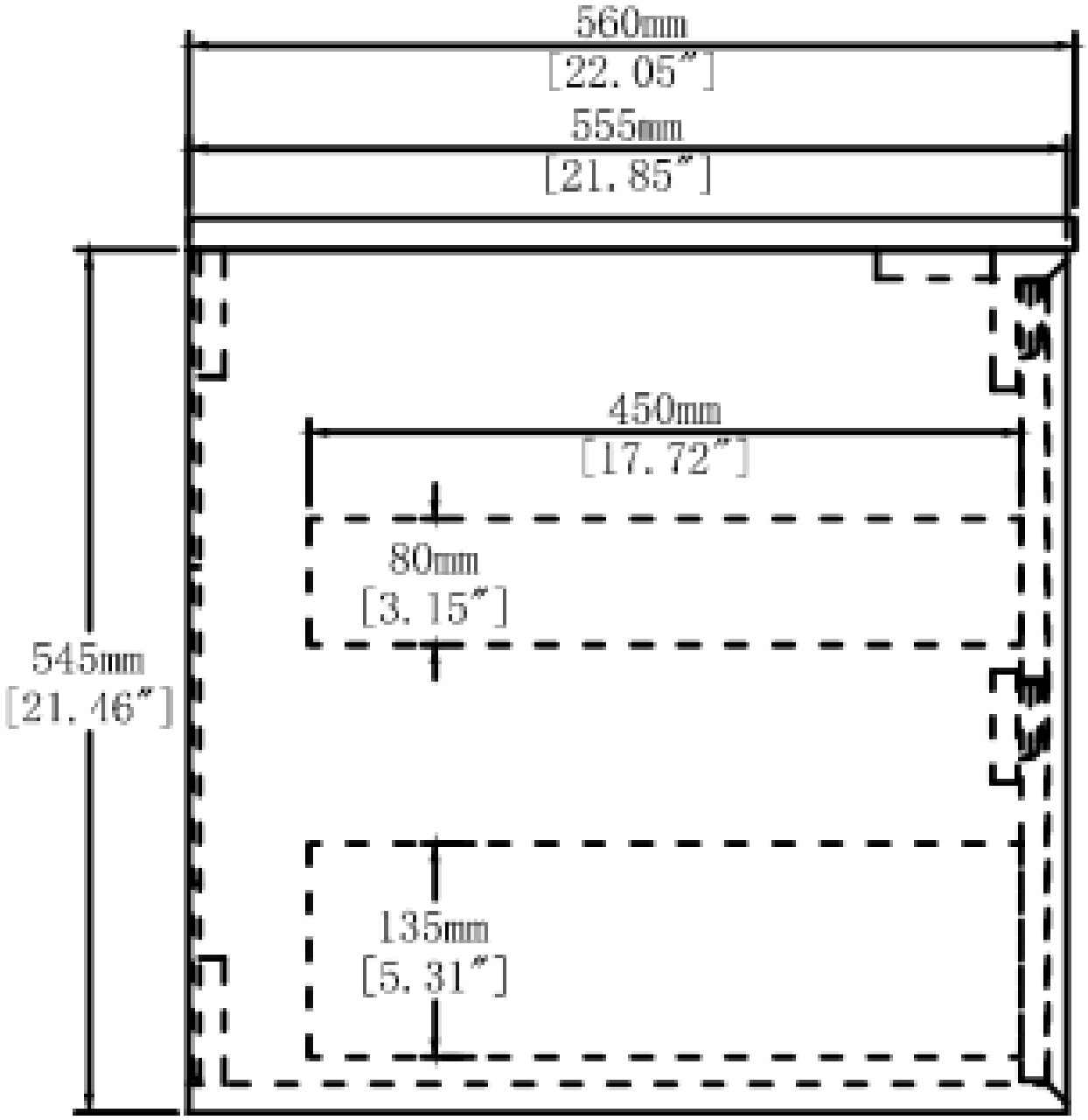
560mm
[22.05″]
555mm
[21.85″]
450mm
[17.72″]
80mm
[3.15″]
545mm
[21.46″]
135mm
[5.31″]

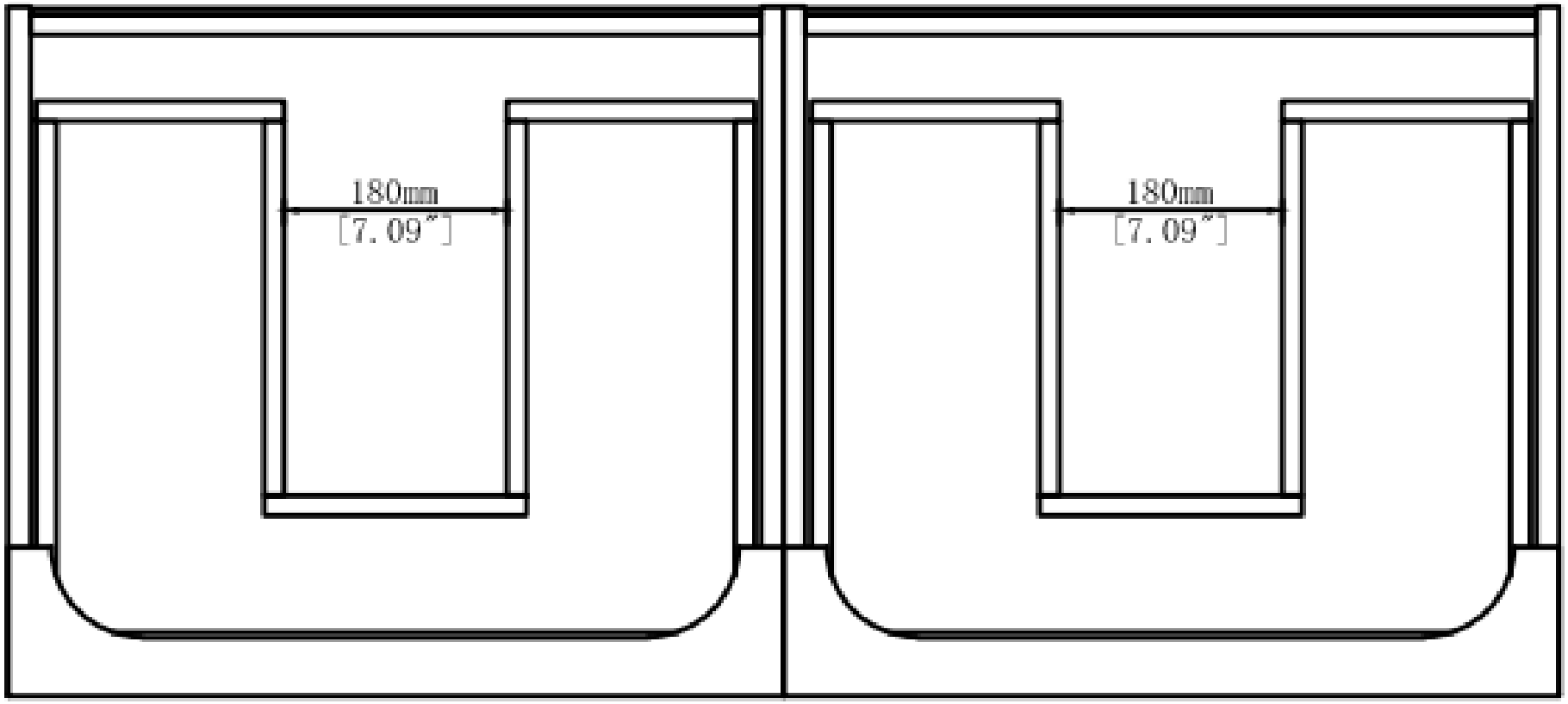
180mm
[7.09"]
180mm
[7.09"]

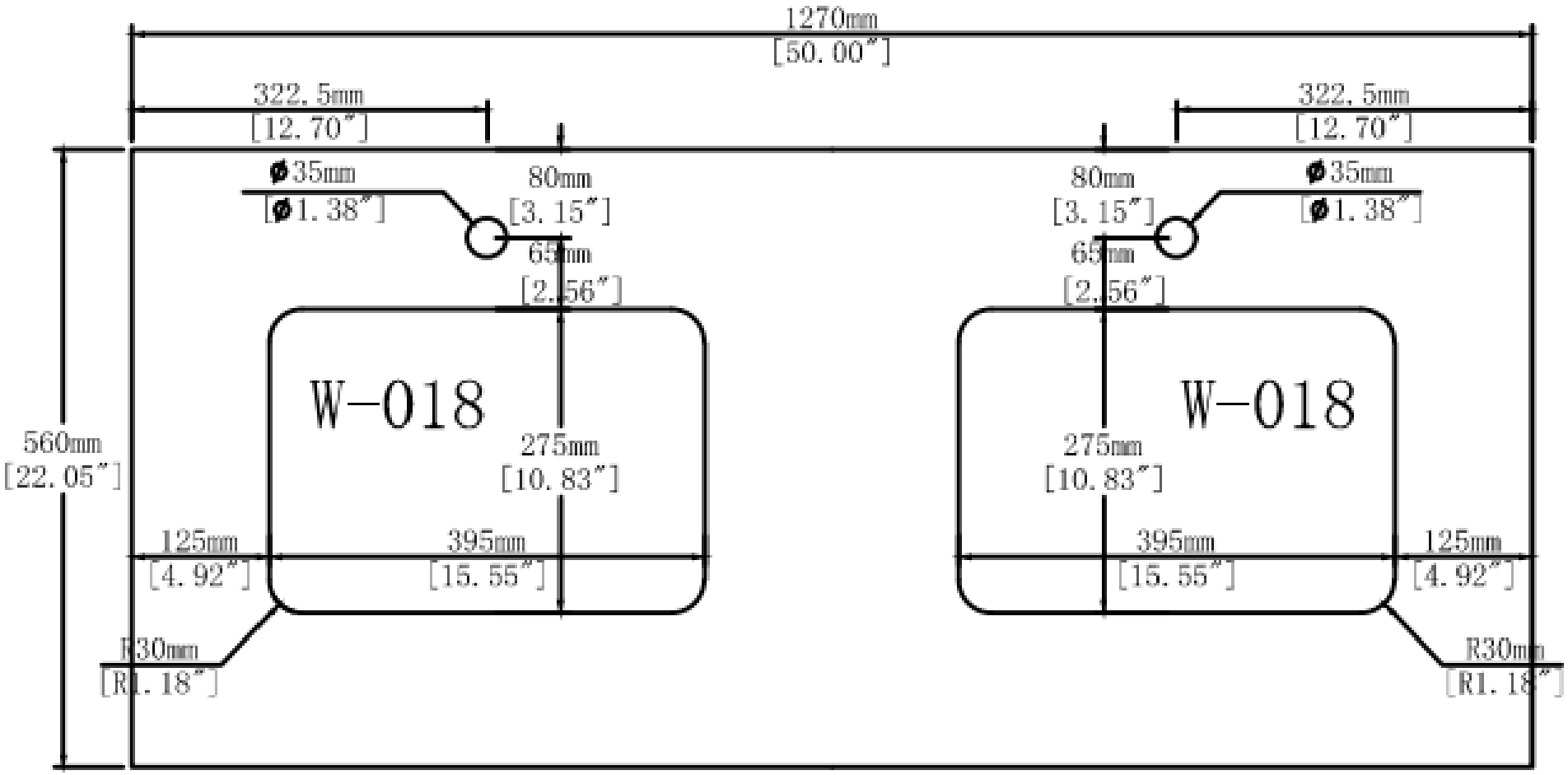
1270mm
[50.00″]
322.5mm
[12.70″]
322.5mm
[12.70″]
ø35mm
[ø1.38″]
80mm
[3.15″]
80mm
[3.15″]
ø35mm
[ø1.38″]
65mm
[2.56″]
65mm
[2.56″]
W-018
W-018
560mm
[22.05″]
275mm
[10.83″]
275mm
[10.83″]
125mm
[4.92″]
395mm
[15.55″]
395mm
[15.55″]
125mm
[4.92″]
R30mm
[R1.18″]
R30mm
[R1.18″]