# ASH-V-30

## Ashley Floor Mount 30” Single Sink Vanity

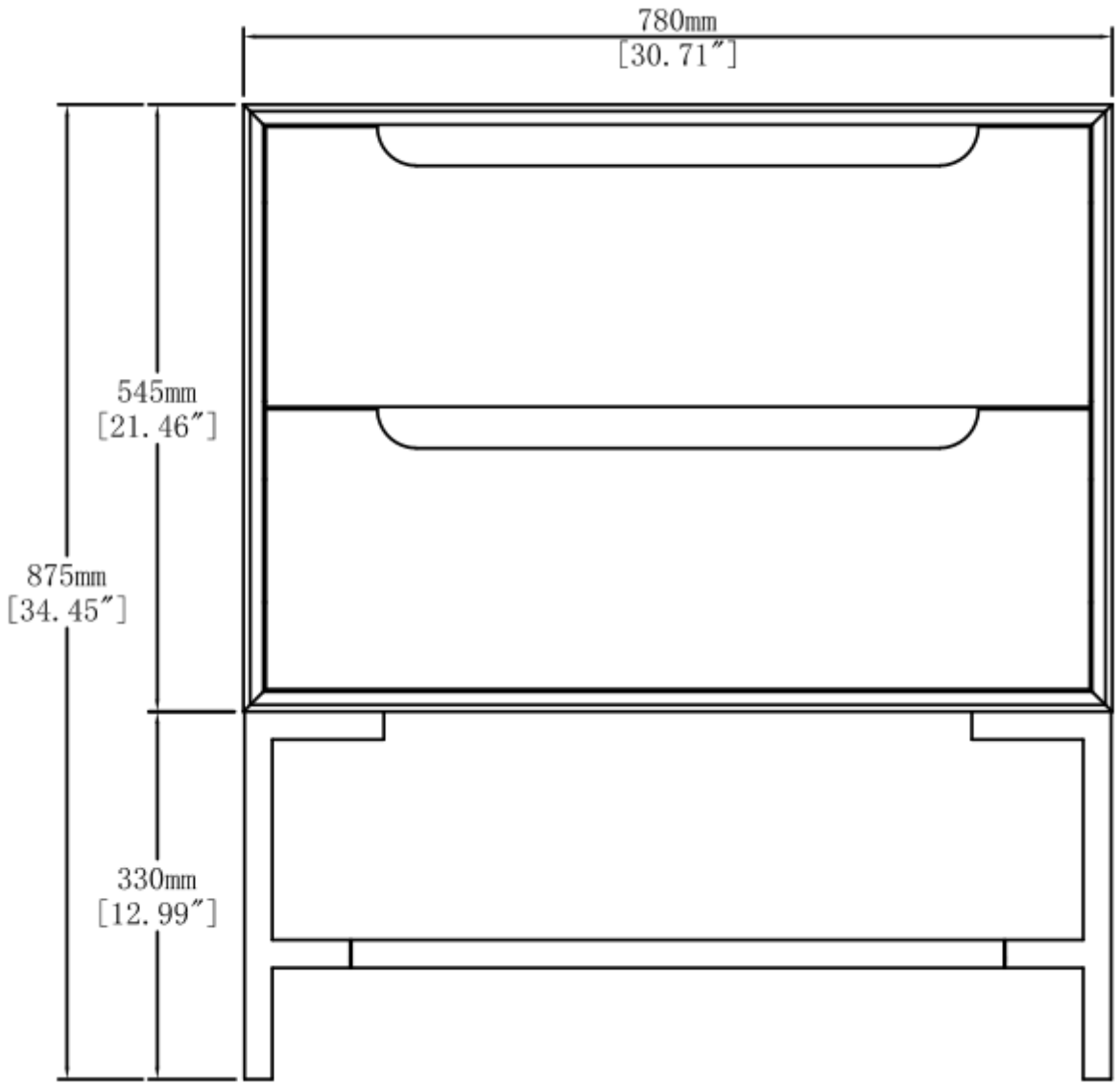

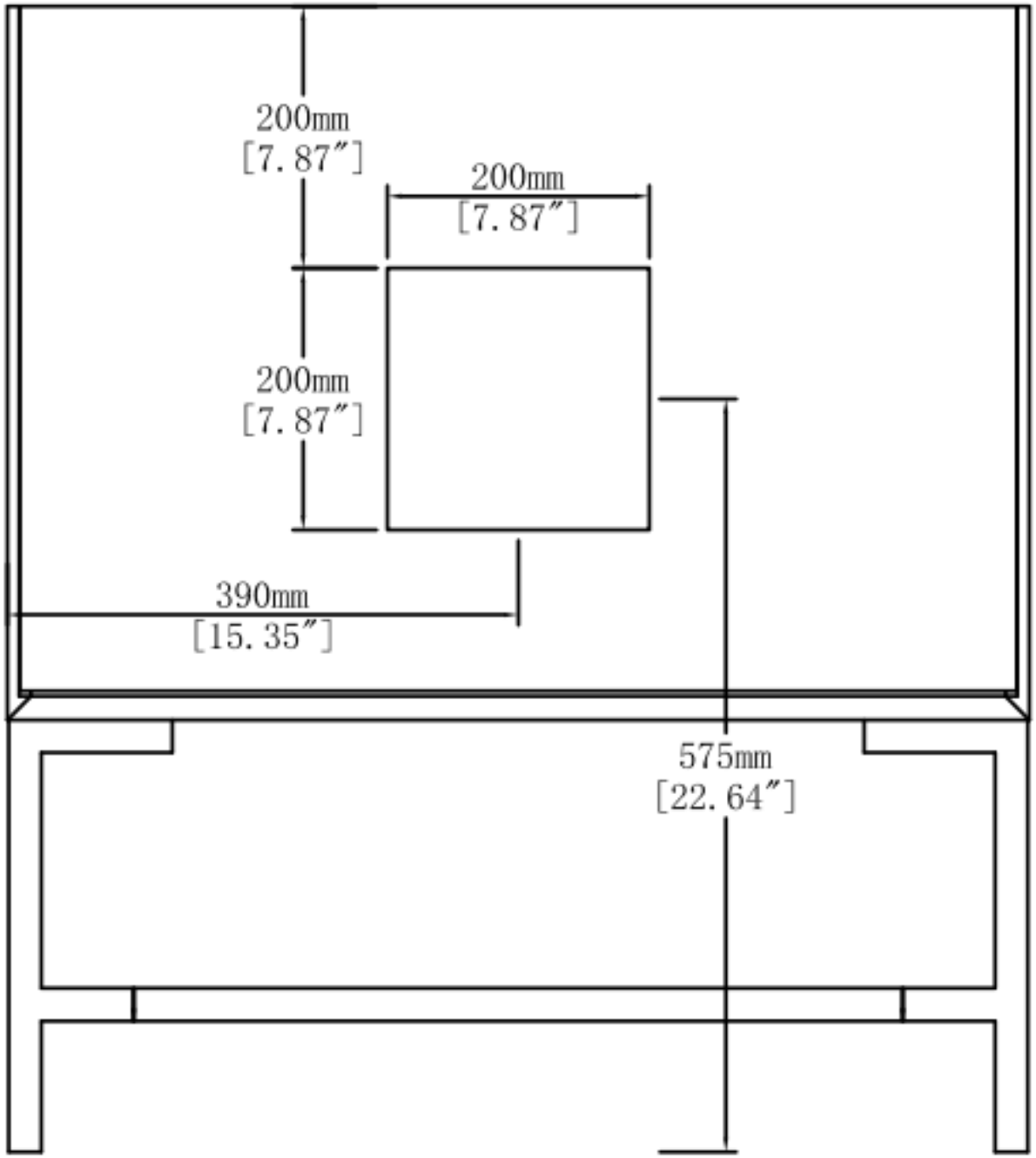
200mm
[7.87″]
200mm
[7.87″]
200mm
[7.87″]
390mm
[15.35″]
575mm
[22.64″]

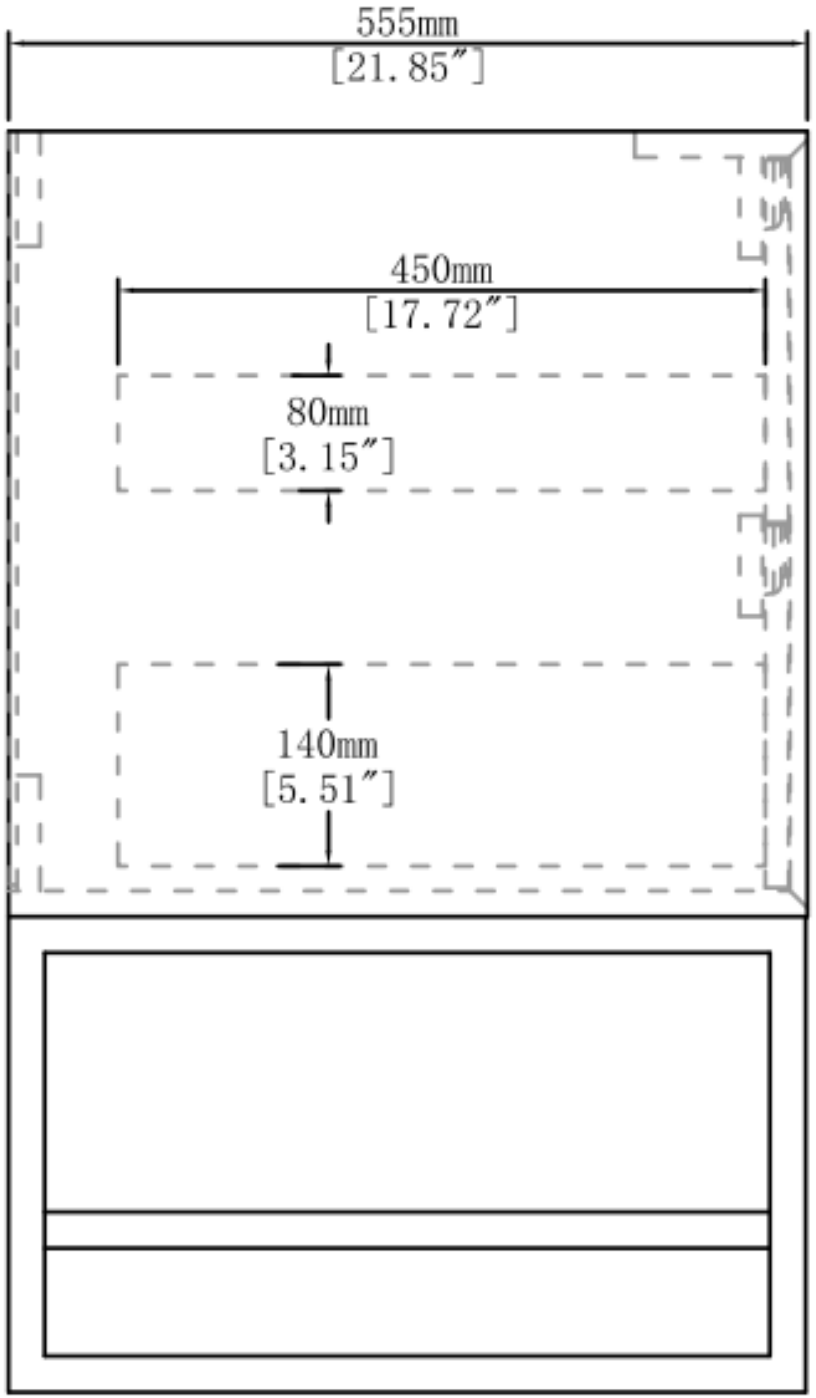
555mm
[21.85″]
450mm
[17.72″]
80mm
[3.15″]
140mm
[5.51″]

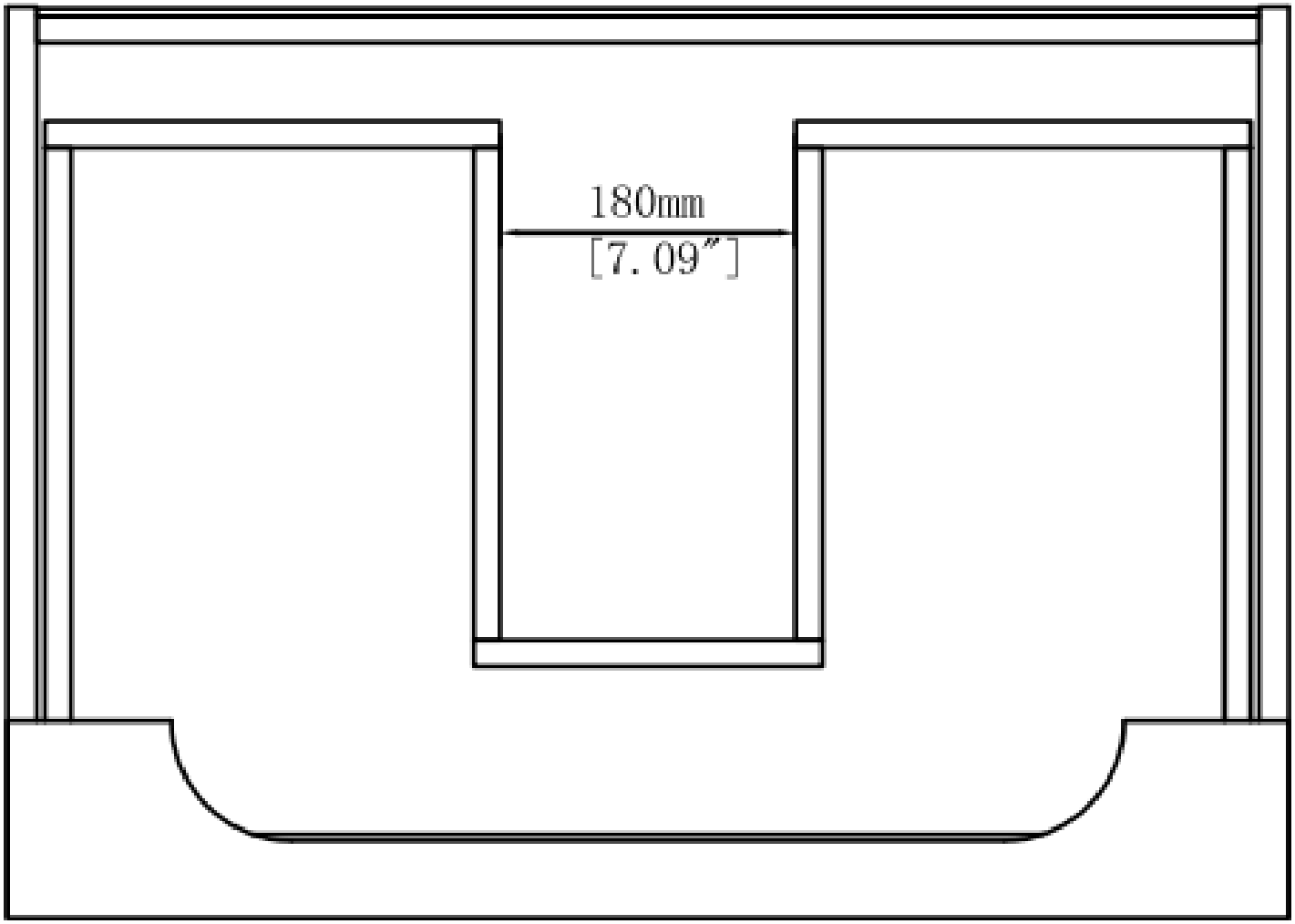
180mm
[7.09″]

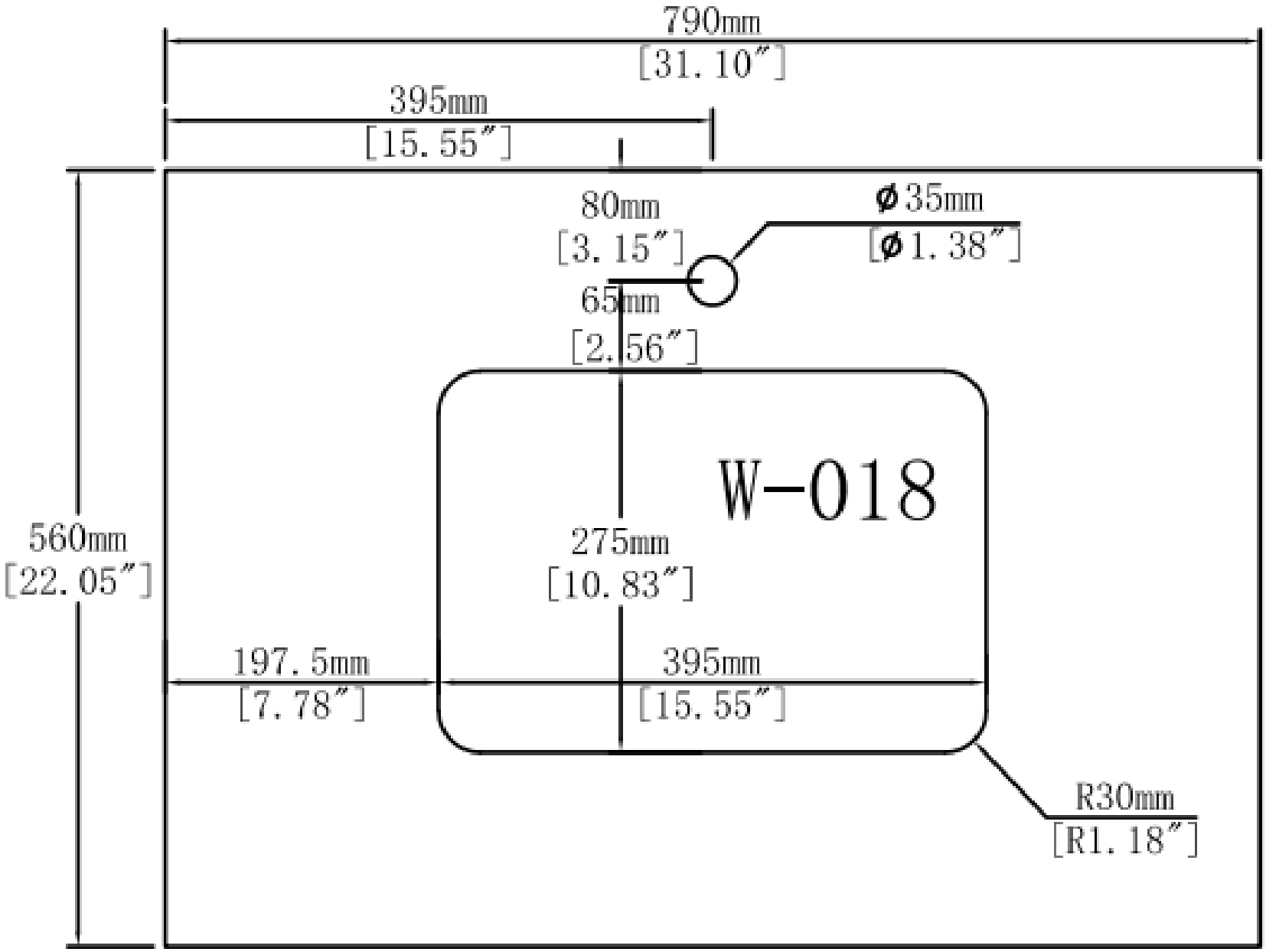
790mm
[31.10″]
395mm
[15.55″]
80mm
[3.15″]
ø35mm
[ø1.38″]
65mm
[2.56″]
W-018
560mm
[22.05″]
275mm
[10.83″]
197.5mm
[7.78″]
395mm
[15.55″]
R30mm
[R1.18″]