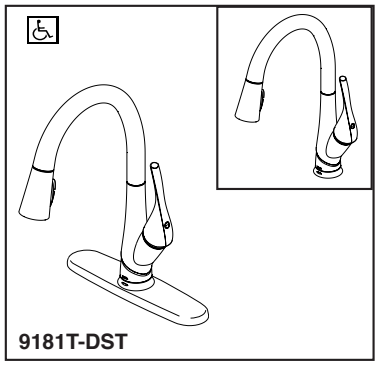

9181T-DST

Submitted Model No.:_____

Specific Features:_____

KITCHEN FAUCETS

- Esque® Collection
- Single Handle Pull-Down

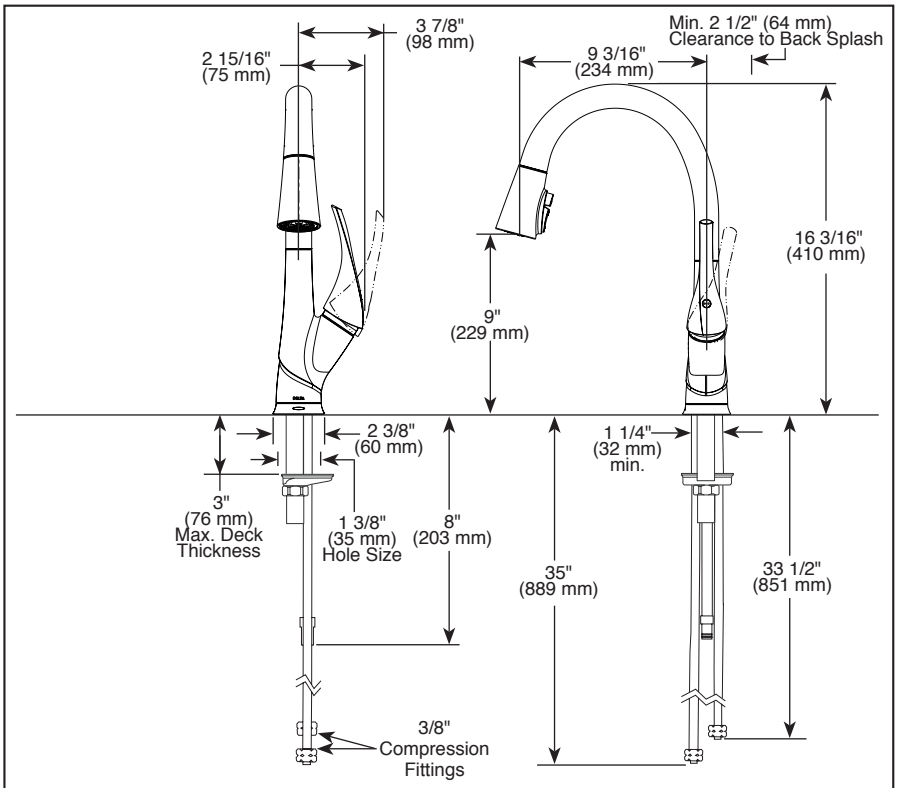

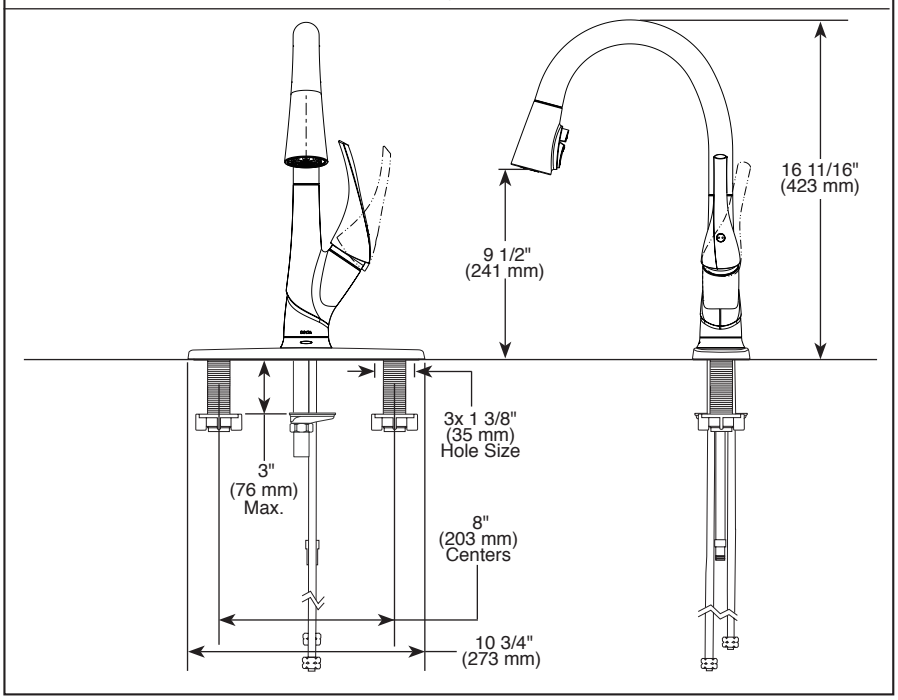

FEATURES:

- Touch$_2$O® Technology
- DIAMOND Seal® Technology
- MagnaTite® Magnetic Docking
- Touch-Clean® Sprayhead
- ShieldSpray™ Technology

STANDARD SPECIFICATIONS:

- Max flow rate: 1.8 gpm @ 60 psi, 6.8 L/min @ 414 kPa
- One or three hole mount (escutcheon optional, not included)
- Diamond coated ceramic cartridge
- 3/8" O.D. straight, staggered PEX supply tubes
- Spout rotates 360°
- Red/blue indicator markings
- Three-function wand: aerated stream, spray or ShieldSpray
- Dual integral double check valves in sprayer
- LED indicator light signals on-off, water temperature and when batteries run low.
- Uses 6 AA batteries (included) or 6 C batteries (not included).
- Optional (EP73954) 120V AC adapter available (3 prong grounded outlet required)

WARRANTY

- Lifetime limited warranty on parts (other than electronic parts and batteries) and finishes: or, for commercial users, for 5 years from date of purchase.
- 5 year limited warranty on electronic parts (other than batteries); or, for commercial users, for 1 year from the date of purchase. No warranty is provided on batteries.

COMPLIES WITH:

- ASME A112.18.1 / CSA B125.1
- ASME A112.18.6
  Indicates compliance to ICC/ANSI A117.1 - Valve control only
- Verified compliant with .25% weighted average Pb content regulations

Delta reserves the right (1) to make changes in specifications and materials, and (2) to change or discontinue models, both without notice or obligation. Dimensions are for reference only. See current full-line price book or www.deltafaucet.com for finish options and product availability.

DSP-K-9181T-DST Rev. C

DELTA FAUCET COMPANY

55 E. 111th Street, Indianapolis, Indiana 46280
350 South Edgeware Road, St. Thomas, ON N5P 4L1

© 2017 Masco Corporation of Indiana